BACK

Geometry with *DERIVE*

David Sjöstrand

Mejerivägen 31
S-43900 Onsala
Sweden

Example 1.

Plot a line segment with given endpoints, e.g. (0,0) och (2,2).

The equation, in parameter form, for a line segment with the endpoints (a,b) and (c,d) is

$$\begin{aligned} x &= a + (c - a)t \\ y &= b + (d - b)t \end{aligned} \qquad 0 \le t \le 1$$

Example 2.

Plot a circle with given centre and radius, e. g. the circle with centre in the point (2,3) and radius equal to 4.

The equation, in parameter form, for a circle with centre (a, b) and radius R is

$$\begin{aligned} x &= a + R\cos t \\ y &= b + R\sin t \end{aligned} \qquad -\pi \le t \le \pi$$

Example 3

Plot a triangle with given vertices, e.g. (0, 0), (2, 2) and (–2, 3).

This can be done by plotting each side according to Example 1.

Result:

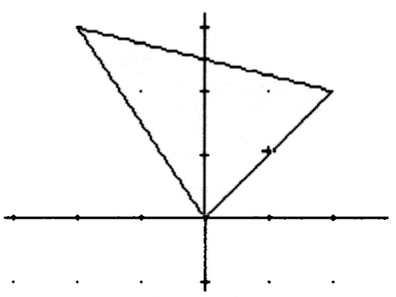

Figure 1.

Example 4.

A triangle with vertices in the points (x1, y1), (x2, y2) and (x3, y3) are given. Derive an expression in the six variables x1, y1, x2, y2, x3 and y3 for each of the coordinates x_M and y_M of the centre of the circumscribed circle of the triangle.

The formulas for the coordinates, (xM, yM), of the centre of the circle are received as the solution of the systems of equations:

$$(xM - x1)^2 + (yM - y1)^2 = (xM - x2)^2 + (yM - y2)^2$$

$$(xM - x1)^2 + (yM - y1)^2 = (xM - x3)^2 + (yM - y3)^2$$

with respect to xM and yM. The radius, R, of the circumscribed circle equals for example the square root of the left side of the first equation of the above system. (If you will use the variables xM and yM, Derive must be in **Word-mode**.)

The following formulas for x_M and y_M will result.

$$x_M = \frac{x1^2y2-x1^2y3+y1^2y2-y1^2y3-y1x2^2-y1y2^2+y1x3^2+y1y3^2+x2^2y3+y2^2y3-y2x3^2-y2y3^2}{2(x1y2-x1y3-y1x2+y1x3+x2y3-y2x3)}$$

$$y_M = \frac{-(x1^2x2-x1^2x3-x1x2^2-x1y2^2+x1x3^2+x1y3^2+y1^2x2-y1^2x3+x2^2x3-x2x3^2-x2y3^2+y2^2x3)}{2(x1y2-x1y3-y1x2+y1x3+x2y3-y2x3)}$$

The expressions for xM and yM can be saved in BASIC format and than be used for plotting the circumscribed circle of a given triangle in a spreadsheet program.

Exercise 1.

a. Derive an expression in the variables x1, x2, x3, y1, y2 and y3 for the radius of the circumscribed circle of the triangle in Example 4.

b. For what points (x1, y1), (x2, y2) and (x3, y3) is the denominator in the formulas for xM and yM equal to zero?

Example 5.

Plot the circumscribed circle of the triangle, wich is plotted in Example 3.

The equation of this circle is

$$\begin{aligned} x(t) &= xM + R\cos t \\ & \qquad\qquad -\pi \le t \le \pi \\ y(t) &= yM + R\sin t \end{aligned}$$

with $R = \sqrt{(xM - x1)^2 + (yM - y1)^2}$

We get the following result

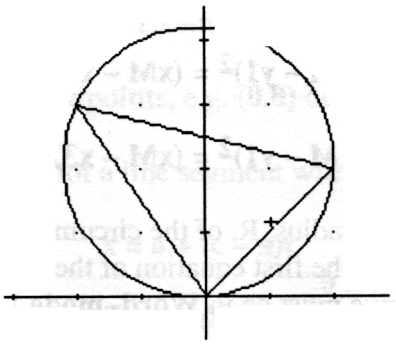

Figure 2

$$x_M = \frac{-1}{10}, \quad y_M = \frac{21}{10} \text{ and } R = \sqrt{\frac{221}{50}}$$

Example 6.

The centre of the circumscribed circle of a given triangle is situated at the point of intersection of the perpendicular bisectors of the sides of the triangle. Plot the perpendicular bisectors of the triangle plotted in Example 3.

An equation in parameter form for the perpendicular bisector of the line segment with the endpoints (a,b) and (c,d) is

$$\mathbf{x(t) = \frac{a + c}{2} - (b - d)t}$$

$$\mathbf{y(t) = \frac{b + d}{2} + (c - a)t}$$

Result:

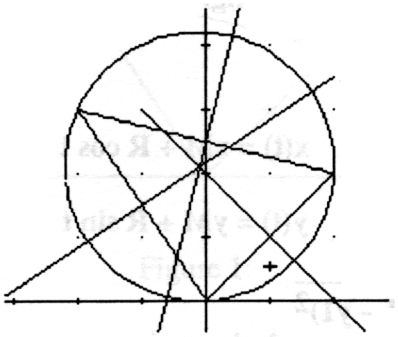

Figure 3.

The equations of the three perpendicular bisectors are

$x = 1 - 2t$	$x = -3t - 1$	$x = -t$
$y = 2t + 1$	$y = 1{,}5 - 2t$	$y = 2{,}5 - 4t$

Example 7.

A triangle with vertices in the points (x1, y1), (x2, y2) and (x3, y3) are given. Derive an expression in the six variables x1, y1, x2, y2, x3 and y3 for each of the coordinates xM and yM of the centre of the inscribed circle of the triangle.

The side opposite to (xi, yi) has the length li. The intersection between the bisector from (x1, y1) and the opposite side of (x1, y1) is (x4, y4). The intersection between the bisector from (x2, y2) and the opposite side of (x2, y2) is (x5, y5).

The centre of the inscribed circle is the intersection between the bisectors of the triangle.

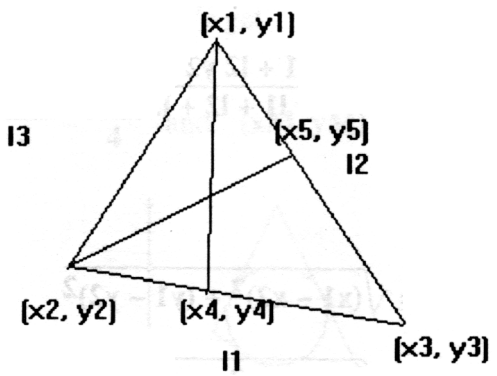

Figure 4

According to the theorem of bisectors the point (x4, y4) divides the side between (x2, y2) and (x3, y3) in the ratio l3/l2. Therefore we get the equation

$$l2(x2 - x4) = l3(x4 - x3)$$

and in a corresponding way

$$l2(y2 - y4) = l3(y4 - y3)$$

Enter these equations and solve them with respect to x4 and y4 respectively. In the same way you can get the corresponding equations for x5 and y5.

Now you can make the following declarations.

$$x4 := \frac{l2x2 + l3x3}{l2 + l3} \qquad y4 := \frac{l2y2 + l3y3}{l2 + l3}$$

$$x5 := \frac{l1x1 + l3x3}{l1 + l3} \qquad y5 := \frac{l1y1 + l3y3}{l1 + l3}$$

The equations of the two bisectors constitute a system of linear equations.

$$y - y1 = \frac{y4 - y1}{x4 - x1}(x - x1)$$

$$y - y2 = \frac{y5 - y2}{x5 - x2}(x - x2)$$

Solve it with respect to x and y. The intersection of the two bisectors is the centre (xM, yM) of the inscribed circle. Therefore we now have the following expression for xM and yM.

$$xM = \frac{l1\ x1 + l2\ x2 + l3\ x3}{l1 + l2 + l3}$$

$$yM = \frac{l1\ y1 + l2\ y2 + l3\ y3}{l1 + l2 + l3}$$

If we make the substitutions

$$l3 = \sqrt{(x1 - x2)^2 + (y1 - y2)^2}$$

$$l2 = \sqrt{(x1 - x3)^2 + (y1 - y3)^2}$$

$$l1 = \sqrt{(x3 - x2)^2 + (y3 - y2)^2}$$

we get the following formulas for xM and yM:

$$xM = \frac{\sqrt{(x3 - x2)^2 + (y3 - y2)^2}\ x1 + \sqrt{(x1 - x3)^2 + (y1 - y3)^2}\ x2 + \sqrt{(x1 - x2)^2 + (y1 - y2)^2}\ x3}{\sqrt{(x3 - x2)^2 + (y3 - y2)^2} + \sqrt{(x1 - x3)^2 + (y1 - y3)^2} + \sqrt{(x1 - x2)^2 + (y1 - y2)^2}}$$

$$yM = \frac{\sqrt{(x3 - x2)^2 + (y3 - y2)^2}\ y1 + \sqrt{(x1 - x3)^2 + (y1 - y3)^2}\ y2 + \sqrt{(x1 - x2)^2 + (y1 - y2)^2}\ y3}{\sqrt{(x3 - x2)^2 + (y3 - y2)^2} + \sqrt{(x1 - x3)^2 + (y1 - y3)^2} + \sqrt{(x1 - x2)^2 + (y1 - y2)^2}}$$

Example 8.

Plot the triangle with vertices in (1, 1), (2, 3) and (4, –1) with its inscribed circle and its bisectors.

For the radius, r, of the inscribed circle we have the following formula

$$r = \frac{T}{p}, \text{ where,}$$

$$T = \sqrt{p(p - l1)(p - l2)(p - l3)},$$

is the area of the triangle and

$$p = \frac{l1 + l2 + l3}{2}$$

is half the perimeter of the triangle.

Our effort gives the following result. We get

$$r = \frac{3\sqrt{5}}{4} - \frac{\sqrt{13}}{4} \quad \text{and} \quad (xM, yM) = (2, \frac{\sqrt{65}}{4} - \frac{3}{4})$$

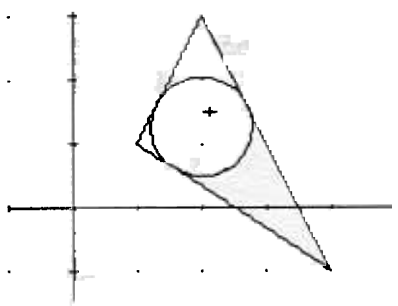

Figure 5.

Exercise 2.

a) Calculate the coordinates of the point in R^3 (xM, yM, zM), which have the same distance to four given points eg. (1, −2, 3), (−4, 5, −6) , (7, −8, 9) and (10, 11, −12). (If the coordinates of the given points are variables, the resulting expressions for xM , yM and zM are too big for Derive?)

Result: $xM = \frac{117}{10}$, $yM = \frac{1197}{20}$ och $zM = -\frac{1131}{20}$

b) Plot the bisectors of the triangle you have plotted in Example 8.

Result:

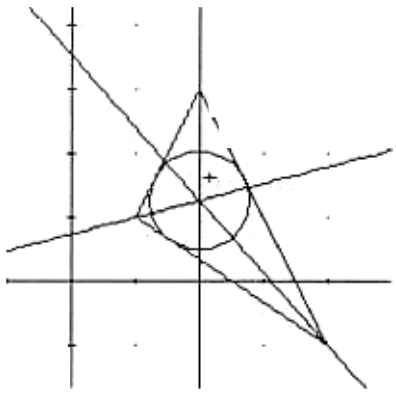

Figure 6.

The bisectors have the equations.

$$y = -x\left[\frac{\sqrt{65}}{8} + \frac{1}{8}\right] + \frac{\sqrt{65}}{2} - \frac{1}{2}$$

$$y = x\left[\frac{\sqrt{65}}{4} - \frac{7}{4}\right] - \frac{\sqrt{65}}{4} + \frac{11}{4}$$

$$x = 2$$

c) Consider the lines defined by the sides of a triangle with vertices in (x1, y1), (x2, y2) and (x3, y3). Derive expressions for the coordinates of the centre of one of the three circles which have these lines as tangents and which is not the inscribed circle. Plot this circle and the lines if the triangle is the one in Example 8.

Example 9.

Let f: $R^2 \rightarrow R^2$ be a mapping, where $f(x,y) = (f_1(x,y), f_2(x,y))$.
The curve

$$x = f_1(\xi(t), \psi(t)) \qquad t_0 \le t \le t_1$$
$$y = f_2(\xi(t), \psi(t))$$

is an image of the curve

$$x = \xi(t) \qquad t_0 \le t \le t_1$$
$$y = \psi(t)$$

under the mapping f.

The mapping Inv: $R^2 \rightarrow R^2$ given by

$$\mathbf{Inv}(x, y) = \left[\frac{x}{x^2 + y^2}, \frac{y}{x^2 + y^2}\right]$$

is called an inversion in the unit circle.

a) Plot the unit circle

$$[\cos t, \sin t], \ -\pi \leq t \leq \pi.$$

b) Plot the circle

$$[0.5 \cos t, 0.5 \sin t], \ -\pi \leq t \leq \pi.$$

c) Make the declaration

$$\mathbf{Inv}(x, y) := \left[\frac{x}{x^2 + y^2}, \frac{y}{x^2 + y^2}\right]$$

d) Plot the image of

$$[0{,}5 \cos t, 0{,}5 \sin t], \ -\pi \leq t \leq \pi.$$

under **Inv**.

Enter the expression **Inv(0.5 COS t, 0.5 SIN t)** and give the command **Simplify**

The following equation will result.

[2 COS (t), 2 SIN (t)]

which is the equation of the image curve. Now you can plot this curve.

Result:
The three circles you now have plotted are plotted in the figure below.

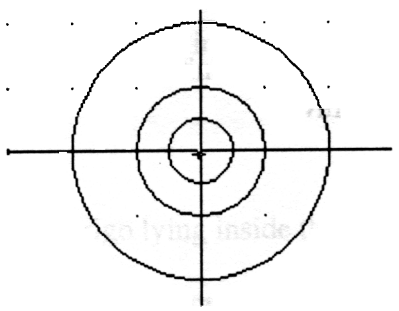

Figure 8.

e) Derive the equation of the image under **Inv** of

$$[R \cos t, R \sin t], \ -\pi \le t \le \pi.$$

Enter the expression **Inv(R COS t, R SIN t)** and give the command **Simplify**.

The following equation will result.

$$\left[\frac{\mathrm{COS}\,(t)}{R}, \frac{\mathrm{SIN}\,(t)}{R}\right]$$

We can conclude that the image under Inv of a circle with radius R and centre in origo is a circle with centre in origo and radius $\frac{1}{R}$.

f) I. Plot the unit circle.

II. Plot a circle **not** passing origo lying inside the unit circle .

III. Plot the image of the circle, you have plotted in II, under **Inv**.

In the figure below we have plotted the unit circle, the circle [0,3 + 0,5 cos t, 0,5 sin t], $-\pi \le t \le \pi$ and its image under Inv.

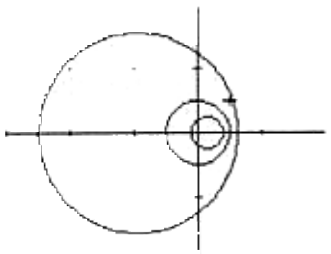

Figure 9.

h) I. Plot the unit circle.

II. Plot a circle passing origo lying inside the unit circle .

III. Plot the image of the circle, you have plotted in II, under **Inv**.

In the figure below we have plotted the unit circle, the circle [0,3 + 0,3 cos t, 0,3 sin t], $-\pi \le t \le \pi$ and its image under Inv.

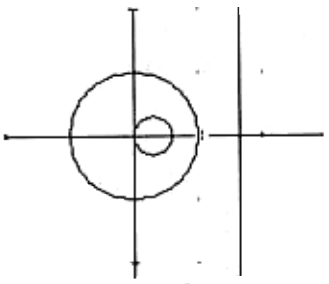

Figure 10.

Can you make any conclusion of the nature of the image under Inv of a circle lying inside the unit circle.

What is the image of origo under Inv? That is, what point is Inv(0, 0)?

i) I. Plot the unit circle.

II. Plot a line segment **not** passing origo lying inside the unit circle .

III. Plot the image of the line segment, you have plotted in II, under **Inv**.

In the figure below we have plotted the unit circle, the line segment [0,3 – 0,5 t, 0,5 t], $0 \leq t \leq 1$ and its image under Inv.

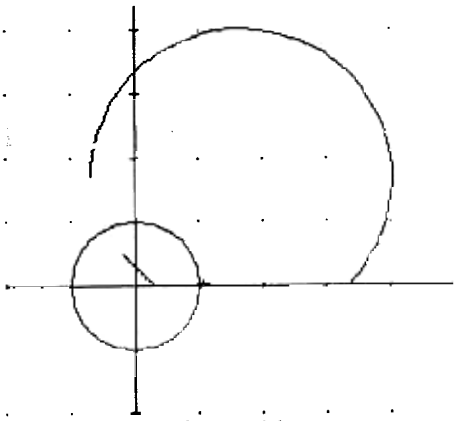

Figure 11.

What is the image under Inv of the straight line [0,3 – 0,5 t, 0,5 t], $-\infty < t < \infty$?

j) I. Plot the unit circle.

II. Plot a line segment passing origo lying inside the unit circle .

III. Plot the image of the line segment, you have plotted in II, under **Inv**.

In the figure below we have plotted the unit circle, the line segment [0,3 t, 0,3 t], $0 \leq t \leq 1$ and its image under Inv.

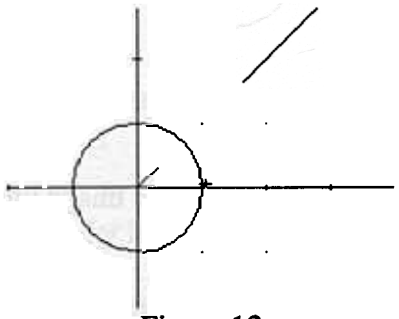

Figure 12

Can you conclude anything about the nature of the image of a line segment lying inside the unit circle under Inv?

k) I. Plot the unit circle.

II. Plot a point inside the unit circle e. g. $[\frac{1}{7}, \frac{1}{5}]$

III. Plot the image under **Inv** of the point, you have plotted in II,

IV. Let d(P) be the distance from the point P to origo. Prove that

$$d(\mathrm{Inv}(\tfrac{1}{7}, \tfrac{1}{5})) \times d(\,(\tfrac{1}{7}, \tfrac{1}{5})) = 1$$

The mapping **Inv** has the quality that an arbitrary point P and its image **Inv(P)** lies on the same straight line through origo. The product of these points distances to origo equals 1.

Prove the above statement. It can be done by proving that

$$\frac{\dfrac{x}{x^2 + y^2}}{\dfrac{y}{x^2 + y^2}} = \frac{x}{y}$$

and

$$\left[\left[\frac{x}{x^2 + y^2}\right]^2 + \left[\frac{y}{x^2 + y^2}\right]^2 \right](x^2 + y^2) = 1$$

l) I. Plot a regular polygon, which can be inscribed in the unit circle. The equation in parameter form of such a polygon with m vertices is

$$x(t) = \sum_{n=0}^{m-1} \left((n-1)\cos\frac{2\pi n}{m} - n\cos\frac{2\pi(n+1)}{m} + \left(\cos\frac{2\pi(n+1)}{m} - \cos\frac{2\pi n}{m}\right)t\right) \mathrm{CHI}(n, t, n+1)$$

$$y(t) = \sum_{n=0}^{m-1} \left((n-1)\sin\frac{2\pi n}{m} - n\sin\frac{2\pi(n+1)}{m} + \left(\sin\frac{2\pi(n+1)}{m} - \sin\frac{2\pi n}{m}\right)t\right) \mathrm{CHI}(n, t, n+1)$$

$0 \le t \le m + 1$. CHI(a, t, b) is a Derive–function. Use the command **Help** to get information of it.

II. Plot the image of the polygon you have plotted in I under Inv.

The result for m = 6 looks like this

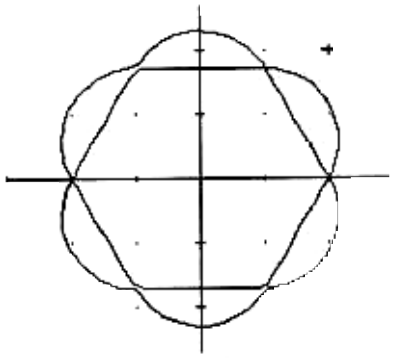

Figure 13

Exercise 3.

a) What curve is the image of $\left[\frac{\mathrm{COS}(t)}{R}, \frac{\mathrm{SIN}(t)}{R}\right], -\pi \le t \le \pi$ under **Inv**?

b) What function is the function **Inv(Inv(x, y))**?

(You have to substitute $\frac{x}{x^2+y^2}$ and $\frac{y}{x^2+y^2}$ for **x** and **y** in **Inv(x, y)**. It is unfortunately not possible to enter **Inv(Inv(x, y))** and then give the command **Simplify**.)

Result: **Inv(Inv(x, y)) = (x, y)**. This means that **Inv** is its own inverse.

Example 10.

Let C be the set of complex numbers. Let M: C → C , where

$$M(z) = \frac{az + b}{cz + d}$$

a, b, c and d are complex numbers. M is called a Möbiusmapping. If z = x + iy and if M(x + iy) is written in the form $f_1(x,y) + if_2(x,y)$, where $f_1(x,y)$ and $f_2(x,y)$ are real functions you get the function $M : R^2 \to R^2$, where $M(x,y) = (f_1(x, y), f_2(x,y))$.

From now on we are lettting a = 1, b = −1, c = 1 and d = 1. Then we get the Möbius–mapping

$$M(z) = \frac{z - 1}{z + 1}$$

a) Derive the explicit expression for M(x, y).

Result:

$$M(x, y) = \left[\frac{x^2 + y^2 - 1}{x^2 + 2x + y^2 + 1}, \frac{2y}{x^2 + 2x + y^2 + 1}\right]$$

b) I. Plot some straight lines passing the point (0, 0) and some circles with centres in the point (0, 0).

What can be said about the angles between the lines and the circles?

In the figure below we have plotted the lines

$$x(t) = \cos\left[\frac{2\pi n}{5} + \frac{\pi}{6}\right]t, \quad y(t) = \sin\left[\frac{2\pi n}{5} + \frac{\pi}{6}\right]t \quad \text{for } n = 1, 2, 3, 4, 5.$$

and the circles

$$x(t) = R\cos t, \quad y(t) = R\sin t, \ \pi \le t \le \pi, \quad \text{for } R = 0.5,\ 1,\ 1.5,\ 2,\ 2.5$$

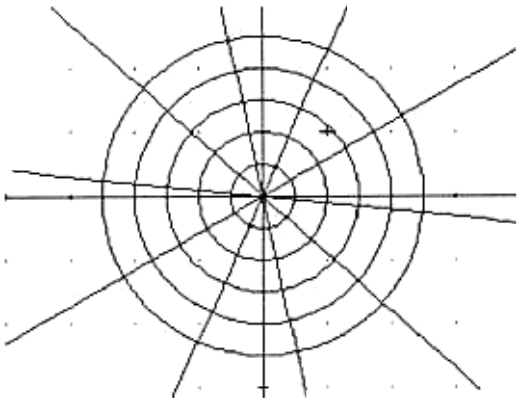

Figure 14.

II. Plot the images under M of the lines and circles, you have plotted in I.

What can be said about the angles between the images of the lines and the images of the circles?

In the figure below we have plotted the images under M of all lines and circles we have plotted in I.

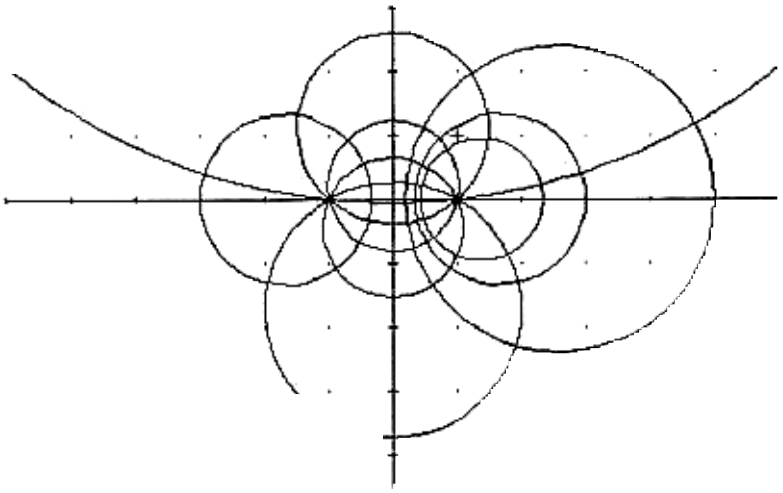

Figure 15.

Do you find it remarkable that the original lines have only one point in common, the origin, but their images under M have two points in common. Can you explain it?

b) Plot two intersecting straight lines e.g. [2t, 3t] and [−t, 2t]. Then plot the images of these lines under M. The images are two circles. Compare the angle between the lines and the angle between the circles.

Example 11.

Derive an equation for the circle $(x - a)^2 + (y - b)^2 = r^2$,with radius equal to 4 and passing through the points (1, 1) and (3, 5).

Let x = 1, y = 1 and r = 4 and then x = 3, y = 5 and r = 4. Solve the system of equations, which is received.

You get the solutions

$$(a, b) = (2 + 2\frac{\sqrt{55}}{5}, 3 - \frac{\sqrt{55}}{5})$$

$$(a, b) = (2 - 2\frac{\sqrt{55}}{5}, 3 + \frac{\sqrt{55}}{5})$$

Exercise 4.

Plot the two circles with radius = 5 and which are passing the points (−1,3) and (2, 5).

Example 12

Analyse the meaning of

a) $\lambda(3x + 4y - 5) + \mu(5x - 6y + 7) = 0$ b) $\lambda(3x + 4y + 5) + \mu(3x + 4y - 3) = 0$
for different values of λ and μ.

Assign different values to λ and μ. Solve the resulting equations for y and plot the graphs of the functions you then receive.

Exercise 5.

1. Plot at least 5 lines passing the point of intersection of the lines $x + 2y - 3 = 0$ and $4x + 5y - 6 = 0$.

2. Plot some straight lines passing to the point (2, 3).

(Every such line has an equation of the form $\lambda(x - 2) + \mu(y - 3) = 0$

Example 13.

Analyse the meaning of

$$\lambda((x - 1)^2 + (y - 2)^2 - 16) + \mu((x - 2)^2 + (y - 1)^2 - 1) = 0$$

for different values of λ and μ.

Assign different values to λ and μ. Solve the resulting equations for y and plot the graphs of the functions you then receive.

Result:

For all values of λ and μ, not both equal to 0, you will get a circle through the points of intersection of the circles $(x-1)^2+(y-2)^2-16=0$ and $(x-2)^2+(y-1)^2-1=0$.

Exercise 6.

1. Plot at least 6 circles passing through two given points e.g.the points (–1, 0) and (1, 0).

(You can either use the idea of Example 11, or have look at the figures of Example 10.)

2. Plot some curves orthogonal to each of the circles you have plotted in Exercise1 above.. (This is interesting because if you can plot these orthogonal curves, you have plotted the fieldlines and the equipotential lines of a magnetic field and you get a picture, which is very common in text books in physics.)

Hint 1. a) Derive a differential equation

$$y' = f(x, y),$$

which is satisfied by the family of functions giving the circles passing the two given points.

You will find that the differential equation is: $y' = \dfrac{2xy}{x^2 - y^2 - 1}$.

b) To get the orhoganal curves you have to solve the differentialequation

$$-\frac{1}{y'} = f(x, y)$$

exactly or numerically.

You can solve differential equations of this kind if you use the expression **DSOLVE_GEN(p, q, x, y, c)** in the utility file **ODE1.MTH** (DERIVE version 2.51)

You will find that the solution is $x + \dfrac{y^2+1}{x} = c$

Hint 2. Look at the last figure of Example 10, Figure 15. In other words you can solve the problem by using Möbius–mappings.